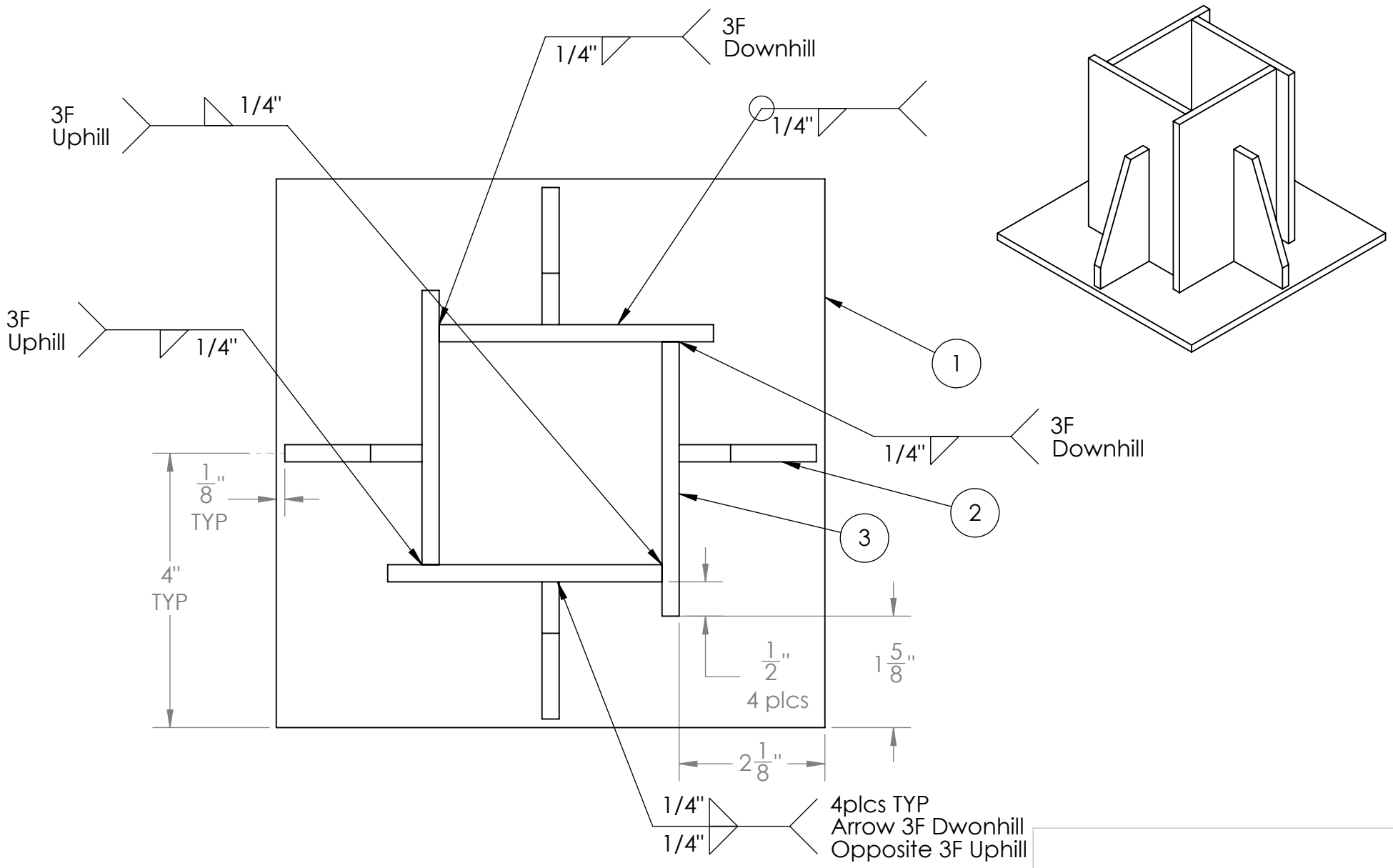

ITEM NO.	PART NUMBER	DESCRIPTION	QTY.
1	Base	8" x 8" x 1/4"	1
2	Gusset	4" x 2" x 1/4"	4
3	Side	4" x 6" x 1/4"	4

SIZE		REV
A	GMAW	
SCALE: 1:4	Drawn: Walker/Hemler	